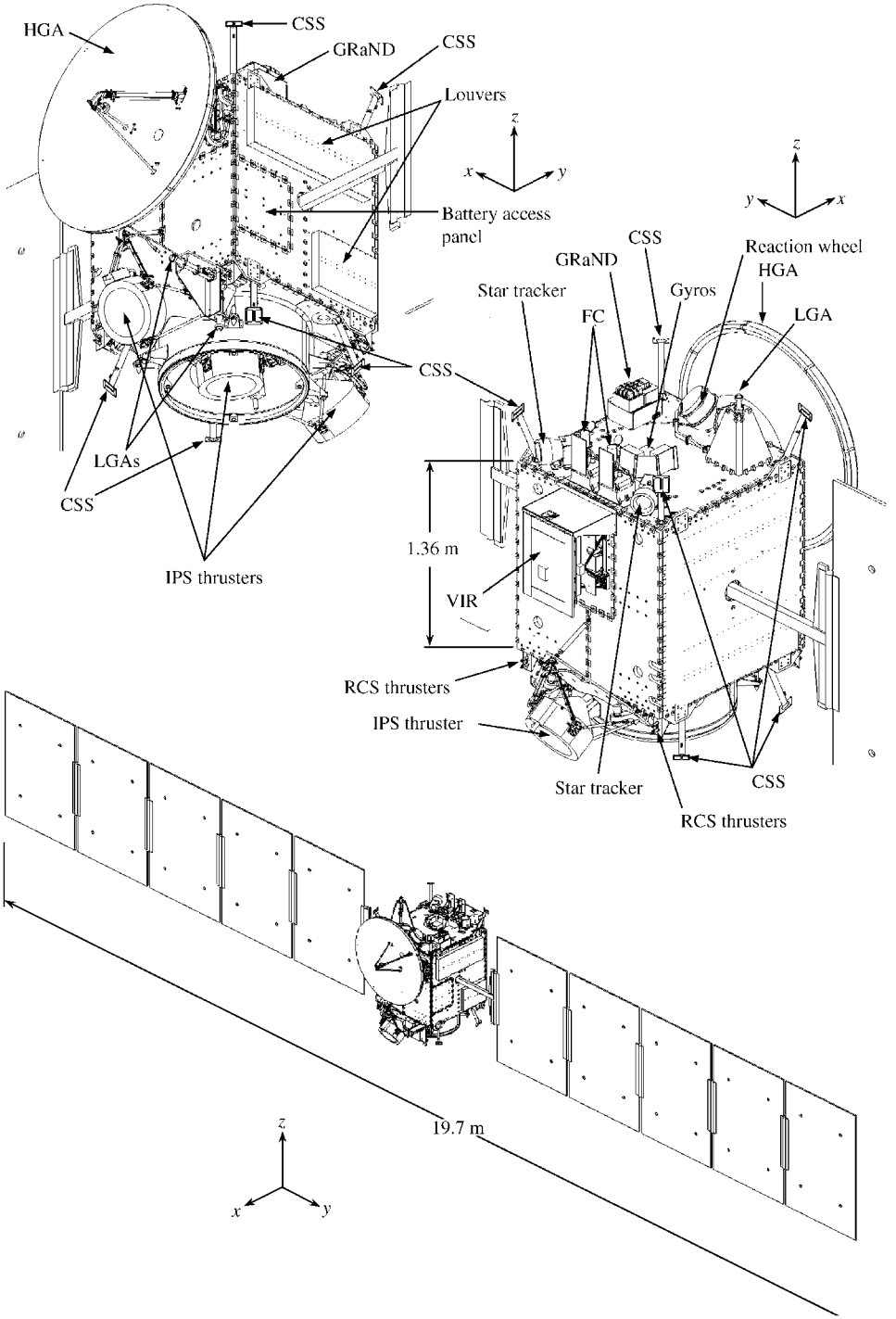

Fig. 1. Dawn flight system. The upper views are the same scale.